RE 29 075/05.02

Replaces: 02.01

Proportional directional valve, pilot operated with electrical position feedback Type 4WRKE

Nominal sizes 10 to 35

Series 3X

Maximum operating pressure 350 bar

Maximum flow 3000 L/min

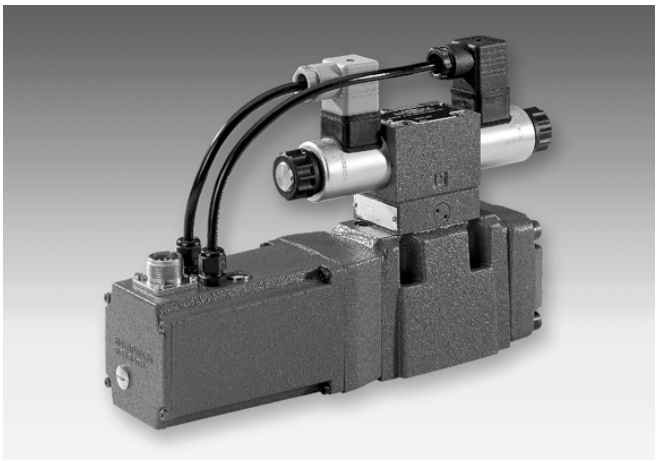

H/A/D 6512/99

Type 4WRKE 10 ...–3X/6EG24...K31/…D3... with integrated control electronics

Overview of contents

Contents	Page
Features	1
Ordering details	2
Preferred types	3
Symbols (simplified)	3
Symbols (detailed)	4
Function, section	4 and 5
Technical data	6
Electrical connections	7
Block circuit diagram / connection allocation for the integrated control electronics	8
Characteristic curves • Transient function • Flow-command value function	9 to 14
Unit dimensions	15 to 19
Pilot oil supply	20

Features

- Pilot operated 2-stage proportional directional valve
- Valve for the control of the size and direction of a flow
- Actuation via proportional solenoids
- For subplate mounting:
  Porting pattern to DIN 24 340 form A, ISO 4401 and CETOP-RP121H (NS 10 to 32),
  subplates to catalogue sheets RE 45 054 to RE 45 060 (separate order), see pages 15 to 18
- Electrical position feedback
- Spring centred main spool
- Single stage proportional directional valve pilot control
- Main stage with closed loop position control
- Integrated control electronics

Ordering details

4WRKE | | | | – / 6E | G24 | | K31/ | | D3 | | *

Electrically operated 2-stage proportional directional valve of 4-way design with integrated electronics

Nominal size 10 = **10**
Nominal size 16 = **16**
Nominal size 25 = **25**
Nominal size 32 = **32**
Nominal size 35 = **35**

Symbols

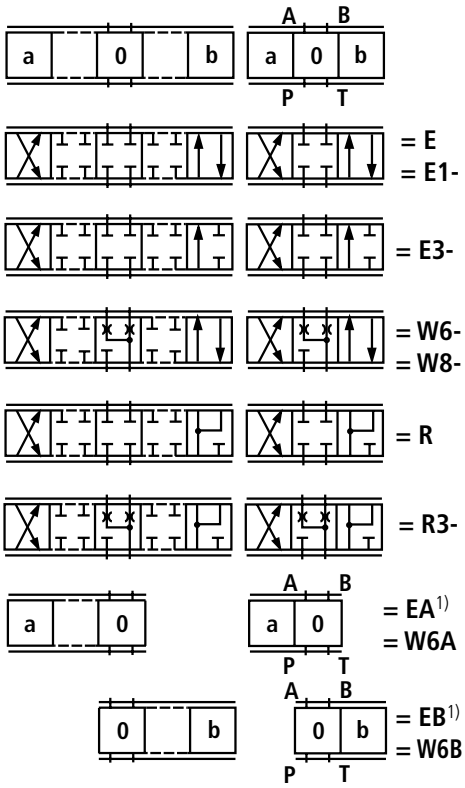

With symbols E1-, W8-:

P → A : q_{Vmax} B → T: $q_V/2$
P → B: $q_V/2$ A → T: q_{Vmax}

With symbols R; R3:

P → A : q_{Vmax} B → P: $q_V/2$
P → B : $q_{Vmax}/2$ A → T: q_{Vmax}

Note:

With the spools W6, W8 and R3 there is a connection from A to T and B to T in the zero position with approx. 2 % of the applicable nominal cross-section.

Further details in clear text

M = [6)] NBR seals
V = [6)] FKM seals

D3 = With pressure reducing valve ZDR 6 DP0-4X/40YM-W80 (fixed settings)

Interfaces

A1 [5)] = Command/actual value ± 10 V
F1 = Command/actual value 4 to 20 mA

Electrical connections

K31 = **Without** plug-in connector with component plug to E DIN 43 563-AM6
Plug-in connector – separate order, see page 7

Pilot oil supply and drain

No code = External pilot oil supply, external pilot oil drain
E = Internal pilot oil supply, external pilot oil drain
ET = Internal pilot oil supply, internal pilot oil drain
T = External pilot oil supply, internal pilot oil drain

Supply voltage

G24 = + 24 V DC

6E = Proportional solenoid with removable coil

3X = Series 30 to 39 (30 to 39: unchanged installation and connection dimensions)
3XH = High Flow version **only** for NS 25 with a nominal flow of 500 L/min

Characteristic curve form

L = Linear
P = Linear with fine control range

Nominal flow in L/min at 10 bar valve pressure differential

25 = [2)] or	**50** = [3)] or	**100** =	Nominal size 10
125 = [3)] or	**200** =		Nominal size 16
220 = [3)] or	**350** = or	**500** = [4)]	Nominal size 25
400 = or	**600** =		Nominal size 32
1000 =			Nominal size 35

1) **Examples:** Spool in switched position „a" (P → B) ordering detail ..**EA**.. or **W6A**
Spool in switched position „b" (P → A) ordering detail ..**EB**.. or **W6B**

2) E, W6 only available with characteristic curve form **L** (linear)

3) E1, W8 only available with characteristic curve form **L** (linear)

4) High Flow version (**only** for NS 25)

5) When replacing the series 2X with series 3X the electrical interface is to be defined with **A5** (enable signal at Pin C)

6) For compatible fluids see page 6

Preferred types

NS 10

Material No.	Type
00719754	4WRKE 10 E50L-3X/6EG24ETK31/A1D3M
00719667	4WRKE 10 W6-50L-3X/6EG24EK31/A1D3M
00616658	4WRKE 10 W8-50L-3X/6EG24ETK31/A1D3M
00704216	4WRKE 10 E100L-3X/6EG24ETK31/A1D3M
00706962	4WRKE 10 E1-100L-3X/6EG24K31/A1D3M
00704245	4WRKE 10 W6-100L-3X/6EG24ETK31/A1D3M
00708991	4WRKE 10 W8-100L-3X/6EG24TK31/A1D3M

NS 16

Material No.	Type
00704916	4WRKE 16 E200L-3X/6EG24ETK31/A1D3M
00973370	4WRKE 16 E1-200L-3X/6EG24K31/A1D3M
00979371	4WRKE 16 W6-200L-3X/6EG24ETK31/A1D3M
00711320	4WRKE 16 W8-200L-3X/6EG24ETK31/A1D3M

NS 25

Material No.	Type
00704202	4WRKE 25 E350L-3X/6EG24ETK31/A1D3M
00973368	4WRKE 25 E1-350L-3X/6EG24K31/A1D3M
00249275	4WRKE 25 W6-350L-3X/6EG24ETK31/A1D3M
00249554	4WRKE 25 W8-350L-3X/6EG24K31/A1D3M

NS 32

Material No.	Type
00712759	4WRKE 32 E600L-3X/6EG24K31/C1D3M
00249276	4WRKE 32 W6-600L-3X/6EG24ETK31/A1D3M

NS 35

Material No.	Type
00717029	4WRKE 35 E1000L-3X/6EG24ETK31/A1D3M
00717030	4WRKE 35 W6-1000L-3X/6EG24ETK31/A1D3M

Symbols (simplified)

Type 4WRKE…–3X…

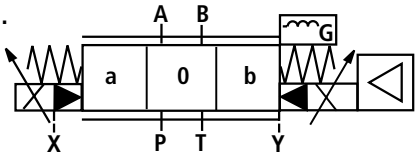

Type 4WRKE…–3X…ET.

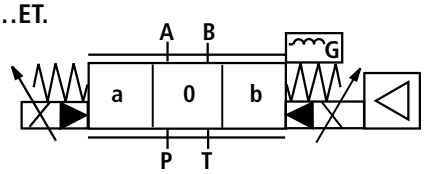

Type 4WRKE…–3X…E.

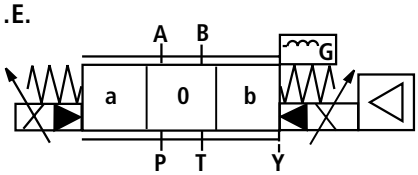

Type 4WRKE . –3X . . T .

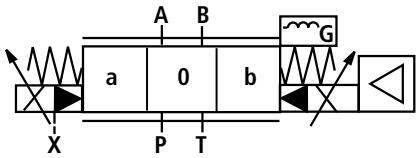

Symbols (detailed)

Example:

1 Pilot control valve type 4WRAP 6…
2 Main valve
3 Pressure reducing valve type ZDR 6 DP0-4X/40YM-W80
4 Integrated electronics

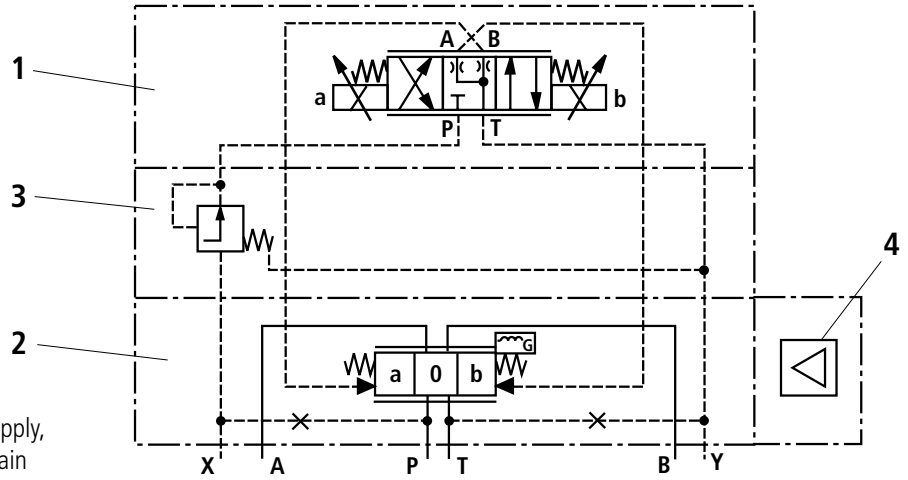

External pilot oil supply, external pilot oil drain

Function, section

Pilot control valve type 4WRAP 6 W7.3X/G24… (1st stage)

The pilot control valve is a direct operated proportional valve. The control edge geometrics were designed and optimised for the use as a pilot control valve for the proportional directional valves type 4WRKE.

The proportional solenoids are pressure tight, oil-immersed DC solenoids with removable coil. They convert an electrical current proportionally into a mechanical force. An increase in the current strength causes an appropriately higher solenoid force. The set solenoid force remains constant over the entire control stroke.

The pilot control valve basically consists of the housing (1), proportional solenoids (2 and 3), valve spool (4) and springs (5 and 6).

In the de-energised condition both actuator ports are connected to the tank. If one of the two solenoids (2 or 3) is energised, then the solenoid force moves the valve spool (4) against the spring (5 or 6).

Once the overlap area is overcome, the connection to tank of one of the two actuator ports is blocked and the connection to the pressure chamber is established. There is flow from P to the control chamber of the main stage.

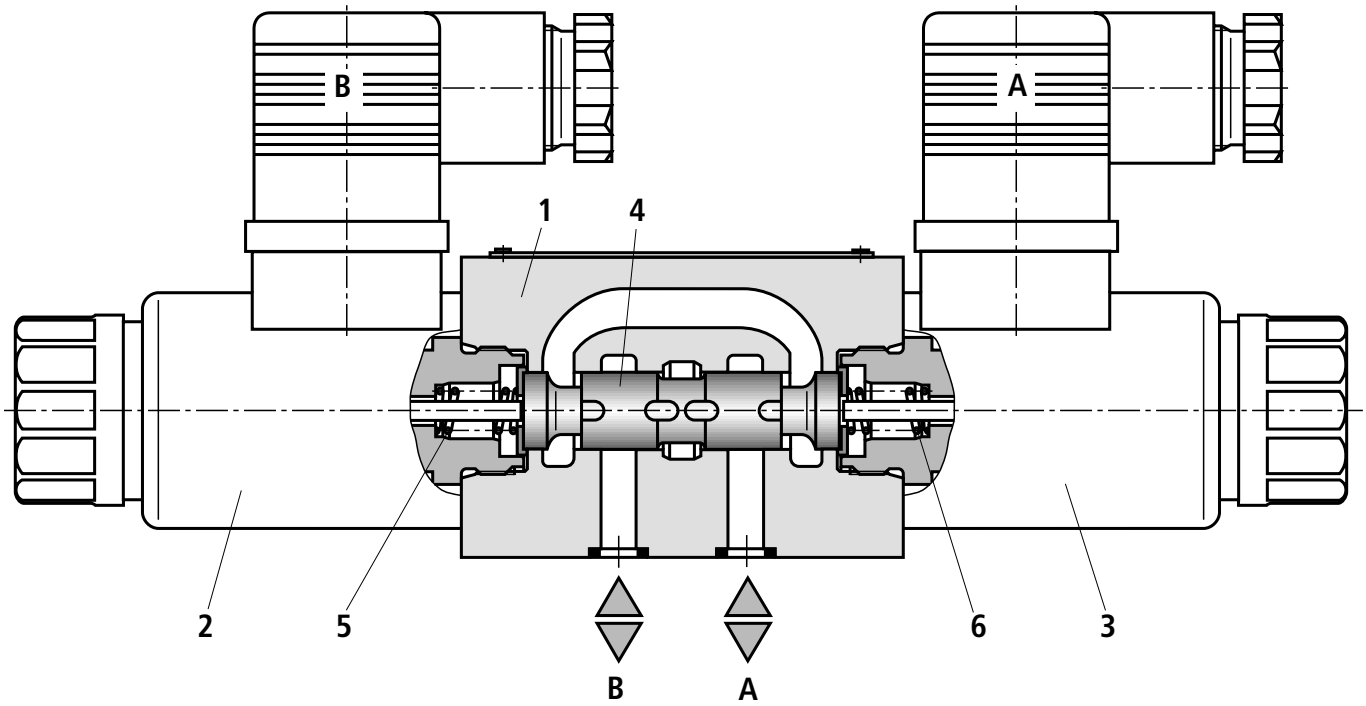

Type 4WRAP 6 W7.3X/G24…

Function, section

The type 4WRKE valves are 2-stage proportional directional control valves.

They control the size and direction of a flow.

The main stage is closed loop position controlled so that the spool position is also independent of flow forces at larger flows.

The valve basically constists of the pilot control valve (1), housing (8), main spool (7), covers (5 and 6), centering spring (4), inductive position transducer (9) and the pressure reducing valve (3).

If no input signal is being applied, then the main spool (7) is held in the centre position by the centering spring (4). The two control chambers in the covers (5 and 6) are connected via the valve spool (2) to the tank.

The main spool (7) is connected to suitable control electronics via the inductive position transducer (9). The positional change of the main spool (7) as well as the alteration of the command value at the summation point of the amplifier produces a differential voltage.

With the command value/actual value comparison a possible control deviation is recognised via the electronics and an electrical current is applied to the proportional solenoid of the pilot valve (1).

The current induces, within the solenoid, a force which is passed on to the solenoid pin which in turn actuates the control spool. The flow which is provided via the control cross-sections causes the main spool to move.

The main spool (7) with the attached core of the inductive position transducer (9) is moved until the actual value is equal to the command value. In the controlled condition the main spool (7) is force balanced and is held in this controlled position.

Spool stroke and control opening change in proportional to the command valve.

The control electronics are integrated into the valve. By matching the valve and the electronics the spread of the series units is kept low.

Prevent the tank lines from emptying; with appropriate installation conditions, a back pressure valve is to be installed (back pressure approx. 2 bar).

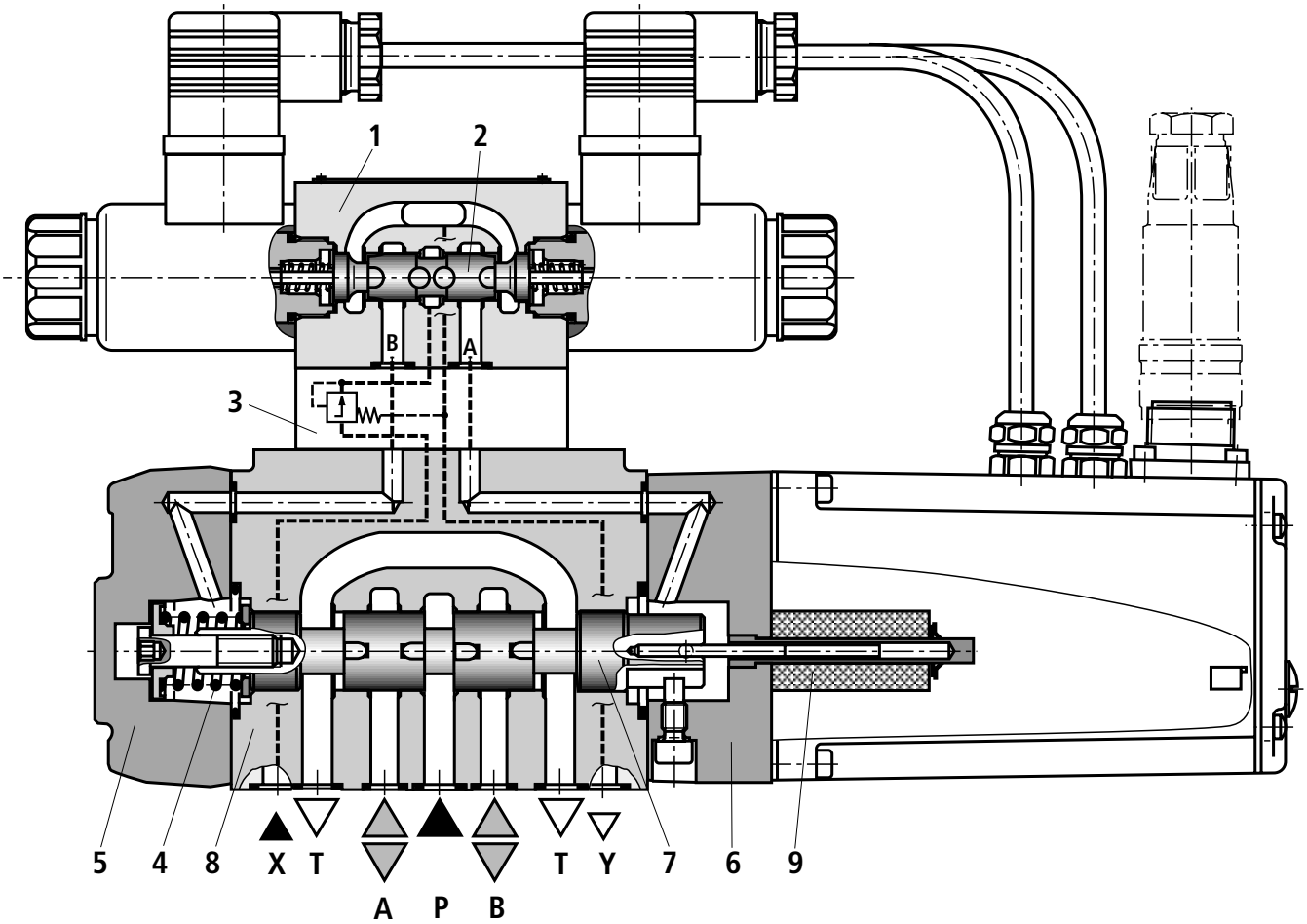

Type 4WRKE 10 …–3X…

The overlap is symmetrically factory pre-set.

With the zero point trimmer, it is possible to correct P – A and P – B in relationship to each other.

Technical data (for applications outside these paramters, please consult us!)

		NS 10	NS 16	NS 25	NS 25[1]	NS 32	NS 35
General							
Installation and commissioning guidelines		Optional, preferably horizontal, see RE 07 800					
Storage temperature range	°C	– 20 to + 80					
Ambient temperature range	°C	0 to + 50					
Weight	kg	8.7	11.2	16.8	17	31.5	34

Hydraulic (measured at p = 100 bar, with HLP46 at 40 °C ± 5 °C)

Operating pressure	Pilot control valve	Pilot oil supply	bar	25 to 315				
	Main valve, ports P, A, B		bar	Up to 315	Up to 350	Up to 350	Up to 210	Up to 350	Up to 350
Return pressure	Port T	Pilot oil drain, internal	bar	Static < 10 (pilot valve)				
		Pilot oil drain, external	bar	Up to 315	Up to 250	Up to 250	Up to 210	Up to 250	Up to 250
	Port Y		bar	Static < 10 (pilot valve)				
Nominal flow q_{Vnom} ± 10 % at Δp = 10 bar Δp = valve pressure differential			L/min	25 50 90	– 125 180	– 220 350	– – 500	– 400 600	– – 1000
Flow of main valve (max. permissible)			L/min	170	460	870	1000	1600	3000
Pilot oil flow at ports X or Y with a step form of input signal from 0 to 100 % (315 bar)			L/min	4.1	8.5	11.7	11.7	13.0	13.0
Pressure fluid				Mineral oil (HL, HLP) to DIN 51 524 [2] Phosphate ester (HFD-R) [3]					
Degree of contamination				Maximum permissible degree of contamination of the pressure fluid is to NAS 1638.			A filter with a minimum retention rate of β_x = 75 is recommended		
	Pilot control valve			Class 7			x = 5		
	Main valve			Class 9			x = 15		
Pressure fluid temperature range			°C	10 to 80, preferably 40 to 50					
Viscosity range			mm²/s	20 to 380, preferably 30 to 45					
Hysteresis			%	≤ 1					
Response sensitivity			%	≤ 0.5					

Electrical

Valve protection to DIN 40 050		IP65 with assembled and locked plug-in connector	
Voltage type		DC	
Signal type		Analogue	
Power, max.	W	72 (average = 24 W)	
Electrical connections		With component plug to E DIN 43 563-AM6	
		Plug-in connector to E DIN 43 563-BF6-3-Pg11 [4]	
		Plug-in connector to E DIN 43 563-BF6-3/Pg13,5 [4]	
Control electronics		Integrated into the valve	
Additional electronic components	Analogue command value module	VT-SWMA-1-1X/...	See RE 29 902
	Analogue command value module	VT-SWMKA-1-1X/...	See RE 29 903
	Analogue command value card	VT-SWKA-1-1X/...	See RE 30 255
	Digital command value card	VT-SWKD-1-1X/...	See RE 30 121

[1] Type 4WRKE 25 ...500.-3X**H**/... (High Flow version)

[2] Suitable for NBR **and** FKM seals

[3] **Only** suitable for FKM seals

[4] Separate order

Note: For details regarding the **environmental simulation test** covering EMC (electro-magnetic compatibility), climate and mechanical loading see RE 29 075-U (declaration regarding environmental compatibility).

Electrical connections, plug-in connector

Plug-in connector
Plug-in connector to E DIN 43 563-BF6-3-Pg11
Separate order under Material No. **00021267** (plastic version)
For pin allocations see block circuit diagram on page 8

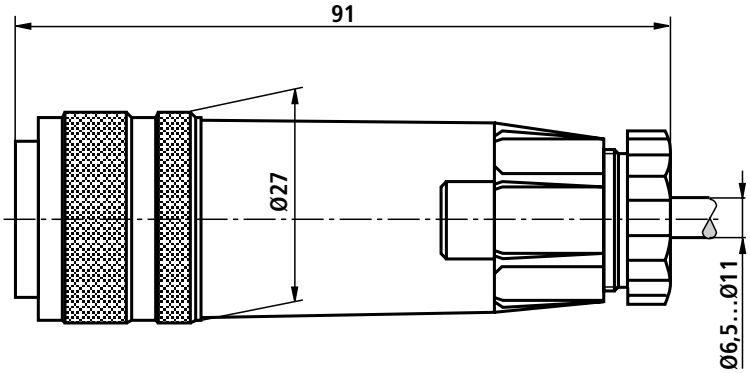

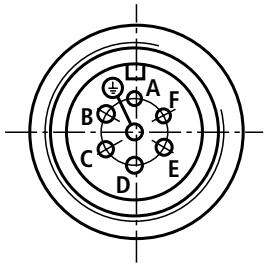

Plug-in connector
Plug-in connector to E DIN 43 563-BF6-3-Pg13,5
Separate order under Material No. **00223890** (metal version)
For pin allocation see block circuit diagram on page 8

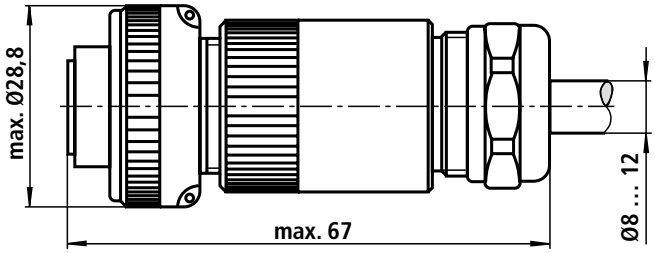

Component plug allocation

	Contact	Signal
Supply voltage	A	24 VDC (18 to 35 VDC); I_{max} = 1.5 A; impulse load ≤ 3 A
	B	0 V
Ref. (actual value)	C	Ref. potential for actual value (contact F)
Differential amplifier input	D	± 10 V or 4 – 20 mA
(command value)	E	0 V ref. potentional
Measurement output (act. value)	F	± 10 V or 4 – 20 mA
	PE	Connected with cooling body and valve housing

Command value: Ref. potential at E and a positive command value at D results in a flow from P to A and B to T
Ref. potential at E and a negative command value at D results in a flow from P to A and B to T

Connection cable: Recommendation:
– Up to 25 m cable length type LiYCY 7 x 0.75 mm²
– Up to 50 m cable length type LiYCY 7 x 1.0 mm²
External diameter:
– 6.5 to 11 mm (plastic plug-in connector)
– 8 to 12 mm (metal plug-in connector)
Connect screen to ⊥ only on supply side.

Note: **Electrical signals (e.g. actual value or enable signals) taken via valve electronics must not be used to switch off the machine safety functions!**
(This is in accordance with the regulations to the European standard „Safety requirement of fluid technology system and components – hydraulics", EN 982!)

Block circuit diagram / connection alloction of the integrated control electronics for type 4WRKE

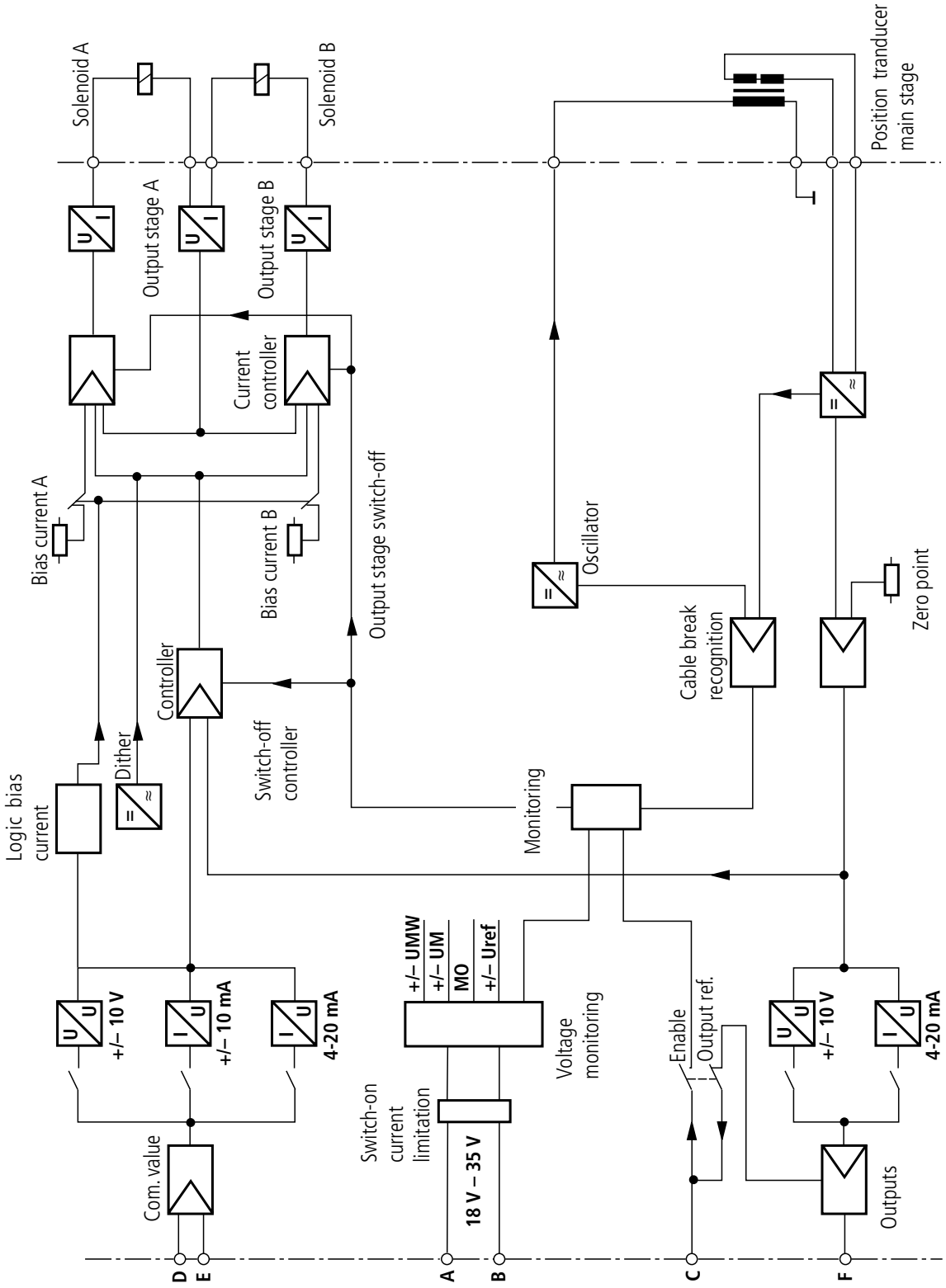

Characteristic curves (valid for P → A or from A → T with a 5 bar pressure drop)

Valid for all of the stated spool symbols E...; WE... and R...

Spool with characteristic curve **L**

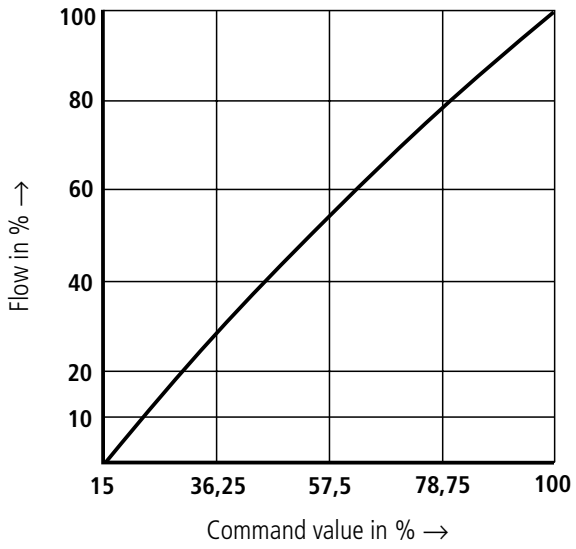

Spool with characteristic curve **P**

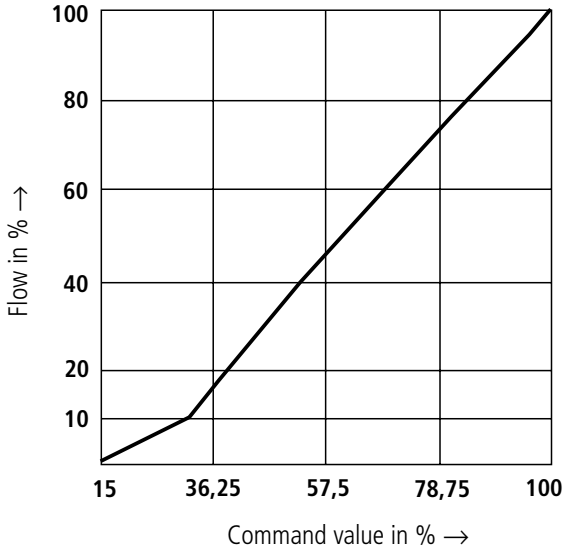

Characteristic curves (measured at p_S = 100 bar, with HLP46 at 40 °C ± 5 °C) NS 10

Transient function with a step form of electrical input signal

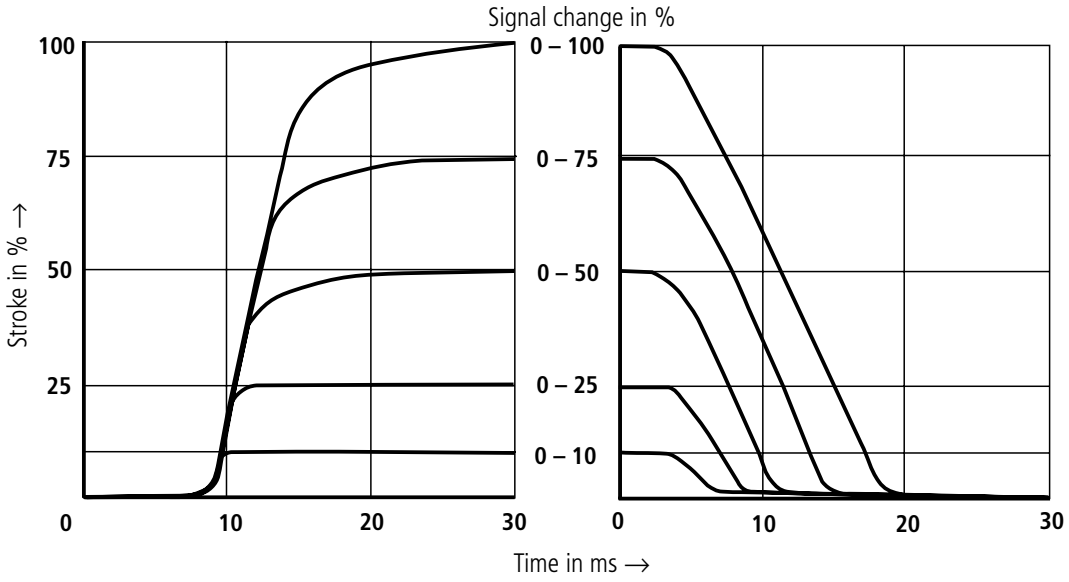

Flow-load function at maximum valve opening

(tolerance ± 10 %)

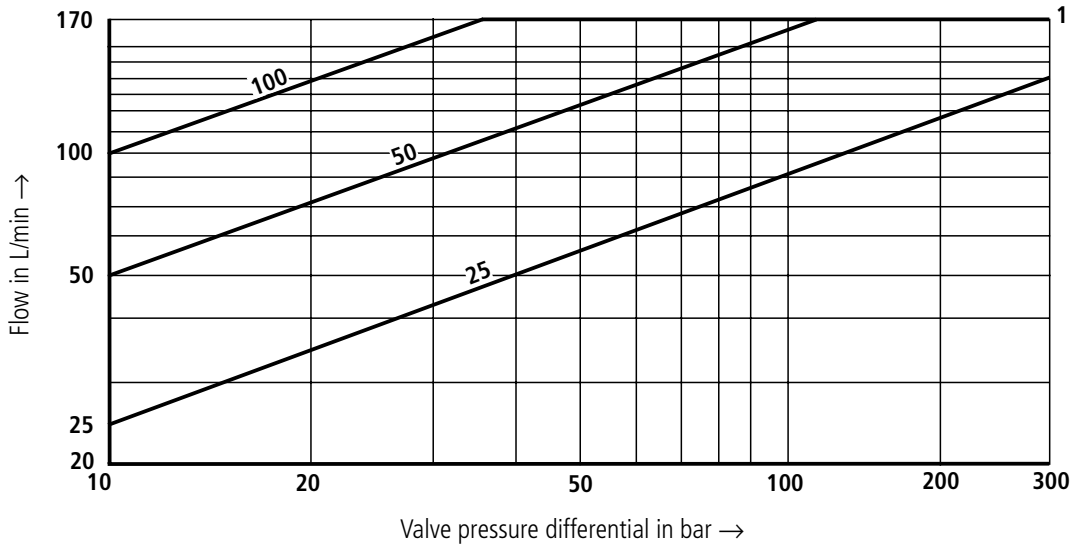

1 = Recommended flow limitation (flow velocity 30 m/s)

Characteristic curves (measured at p_S = 100 bar, with HLP46 at 40 °C ± 5 °C) **NS 16**

Transient function with a step form of electrical input signal

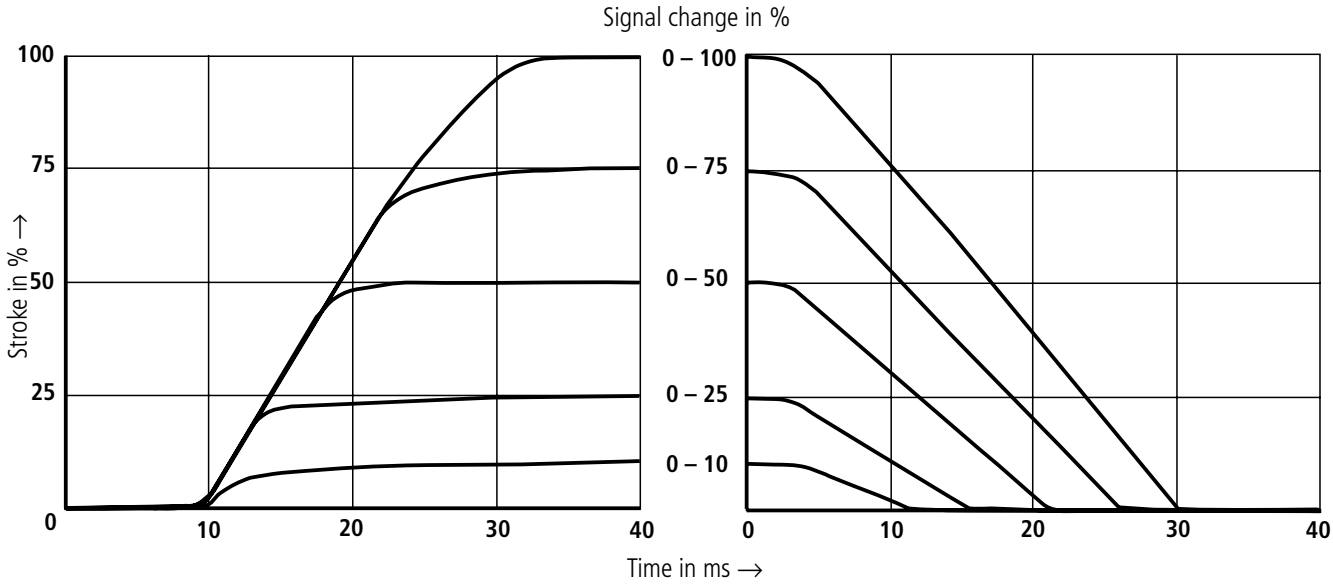

Flow-load function at maximum valve opening
(tolerance ± 10 %)

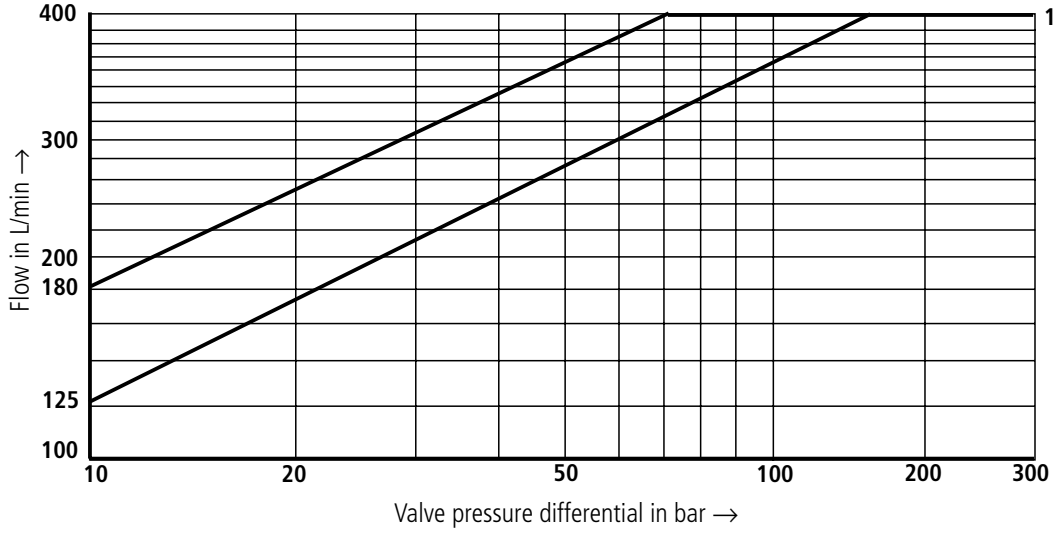

1 = Recommended flow limitation (flow velocity 30 m/s)

Transient function with a step form of electrical input signal

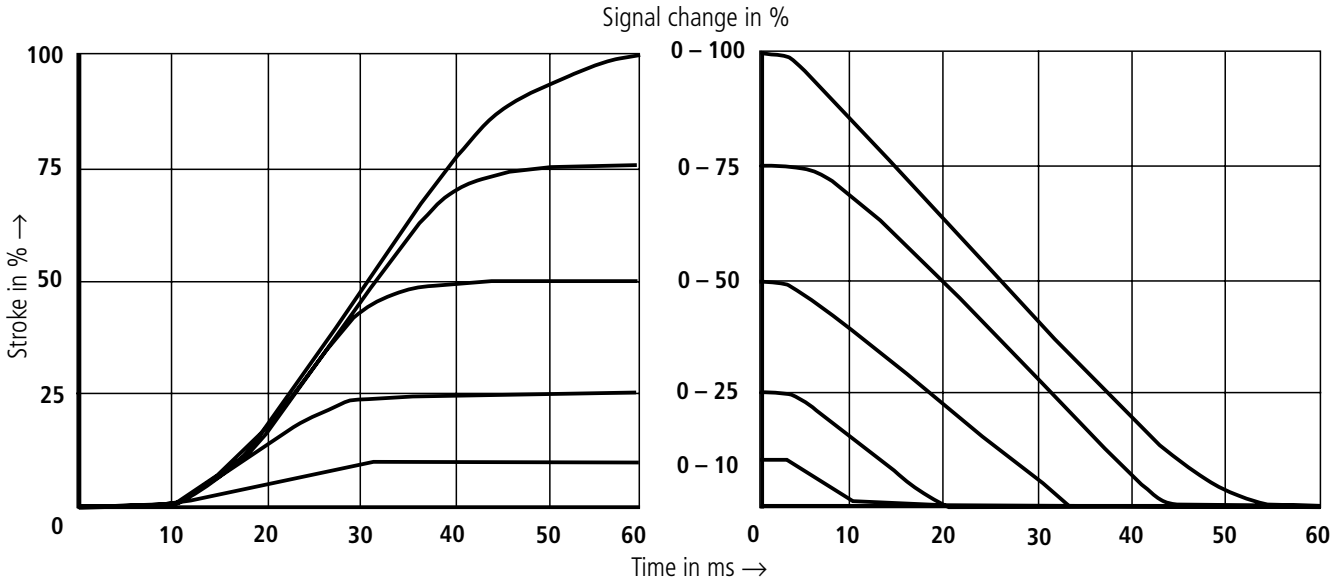

Flow-load function at maximum valve opening
(tolerance ± 10 %)

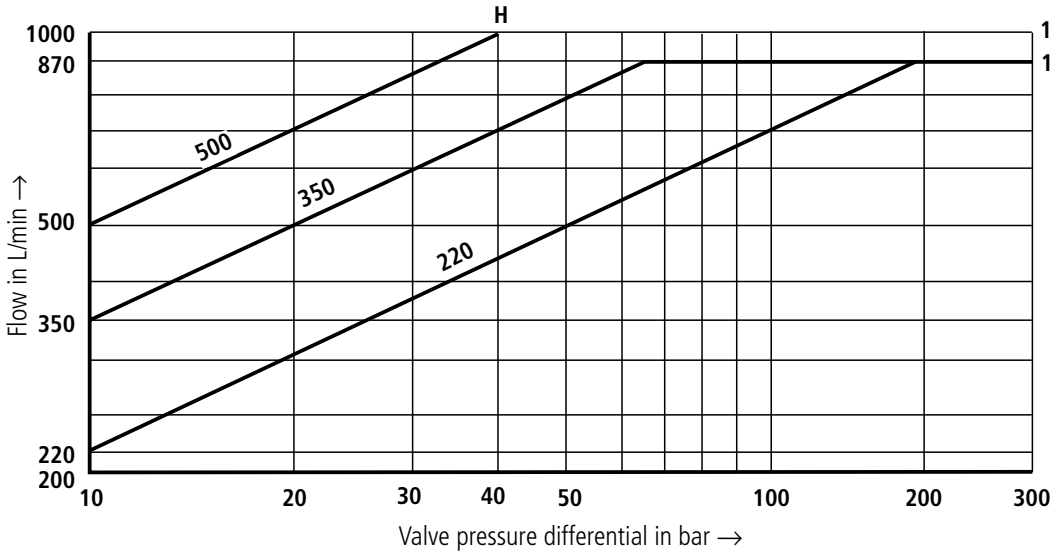

1 = Recommended flow limitation (flow velocity 30 m/s)

H = High Flow version

Transient function with a step form of electrical input signal

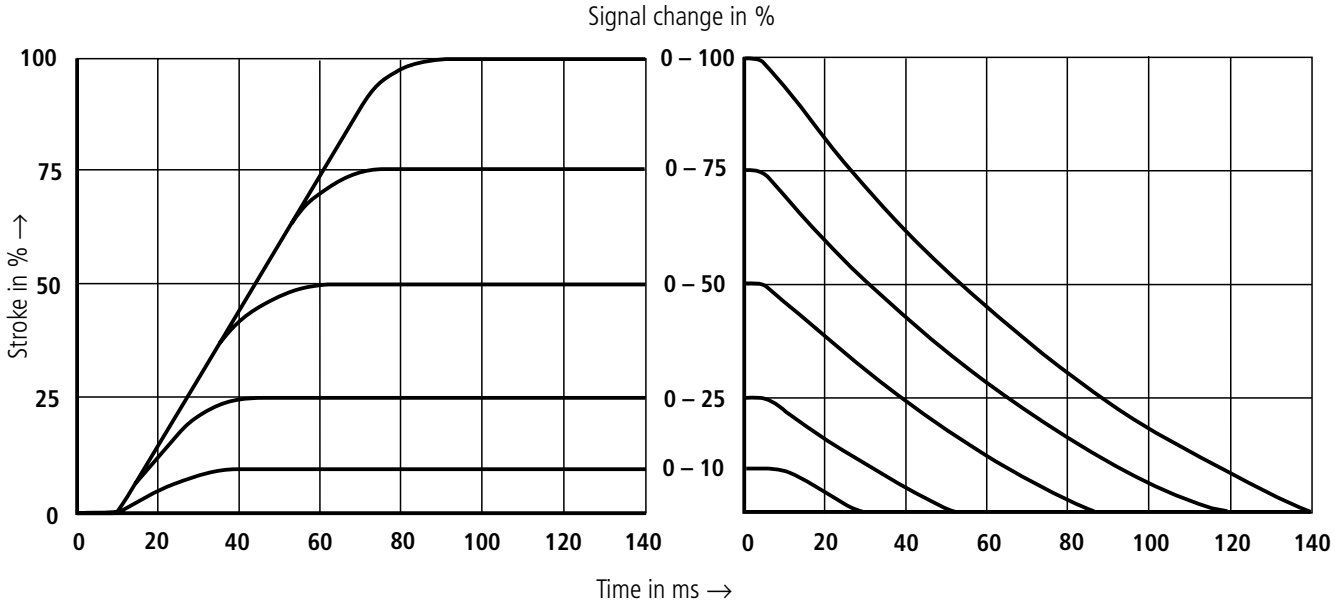

Flow-load function at maximum valve opening
(tolerance ± 10 %)

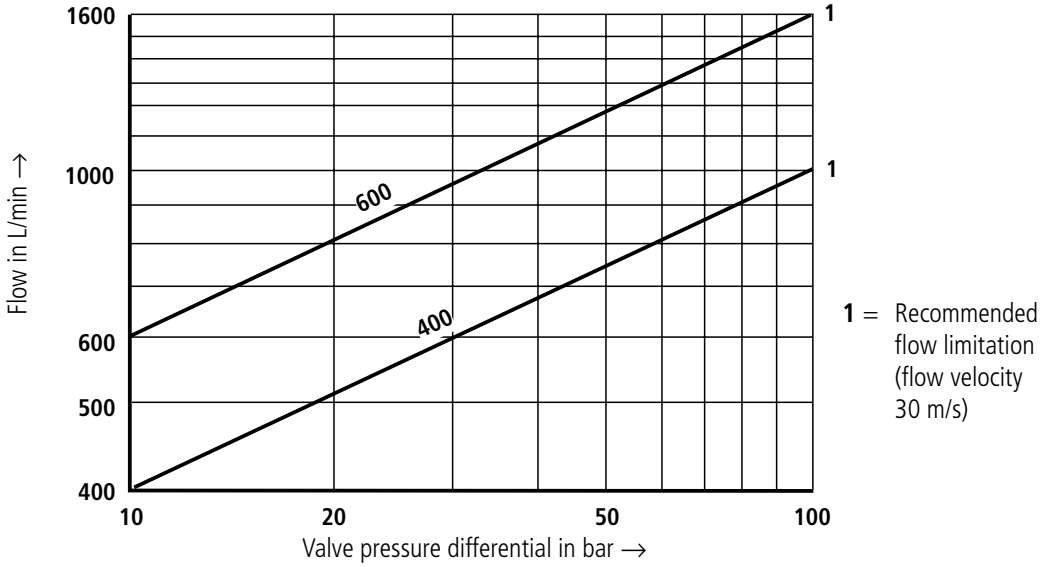

Transient function with a step form of electrical input signal

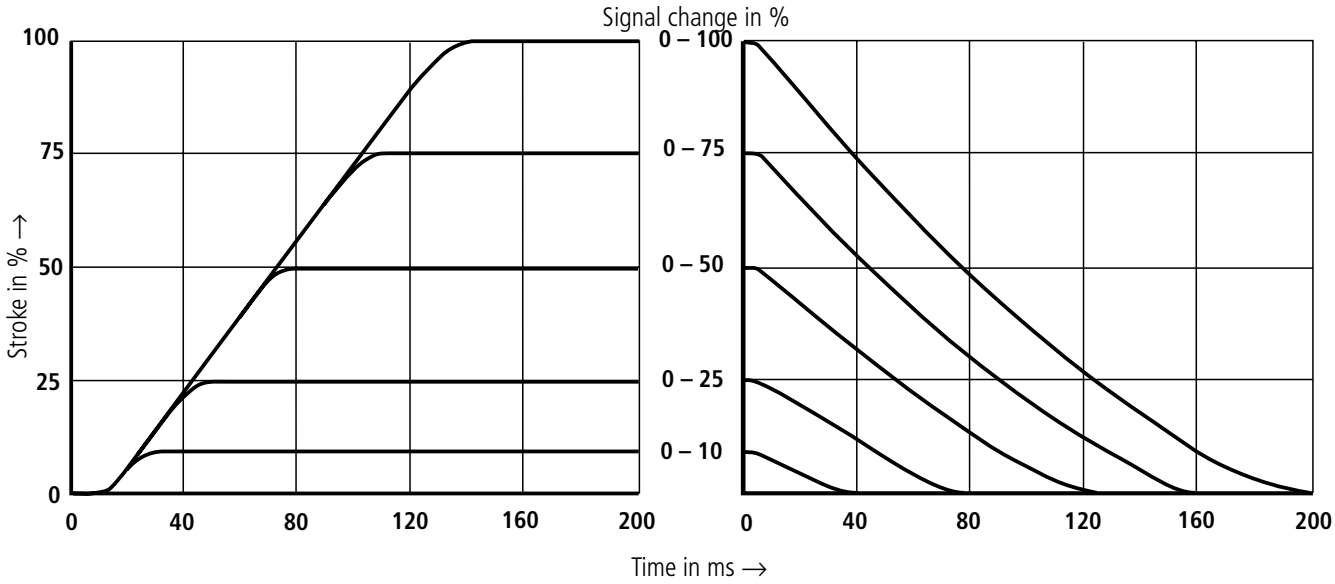

Flow-load function at maximum valve opening
(tolerance ± 10 %)

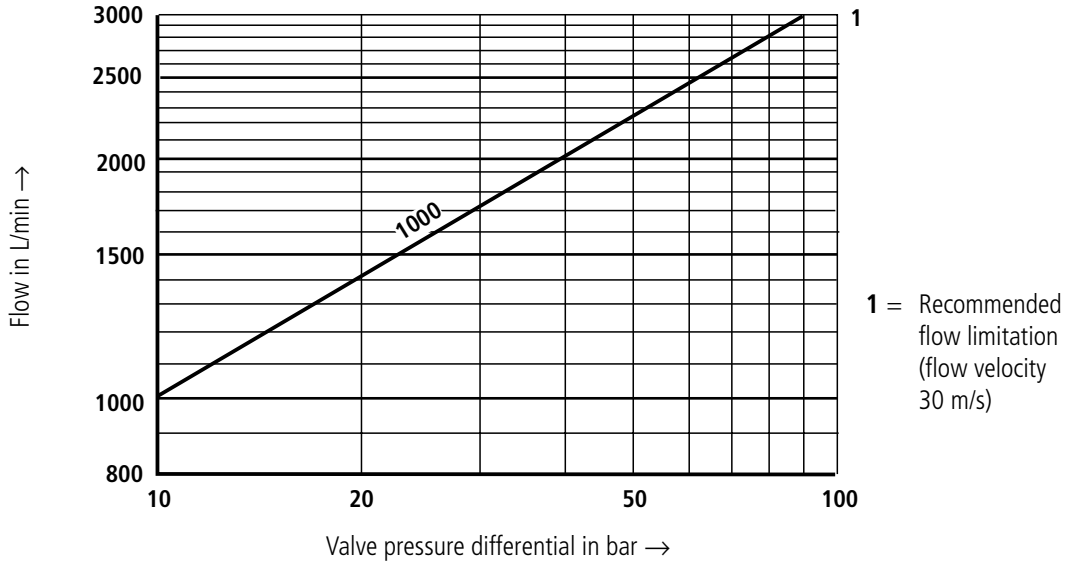

Unit dimensions: NS 10 (dimensions in mm)

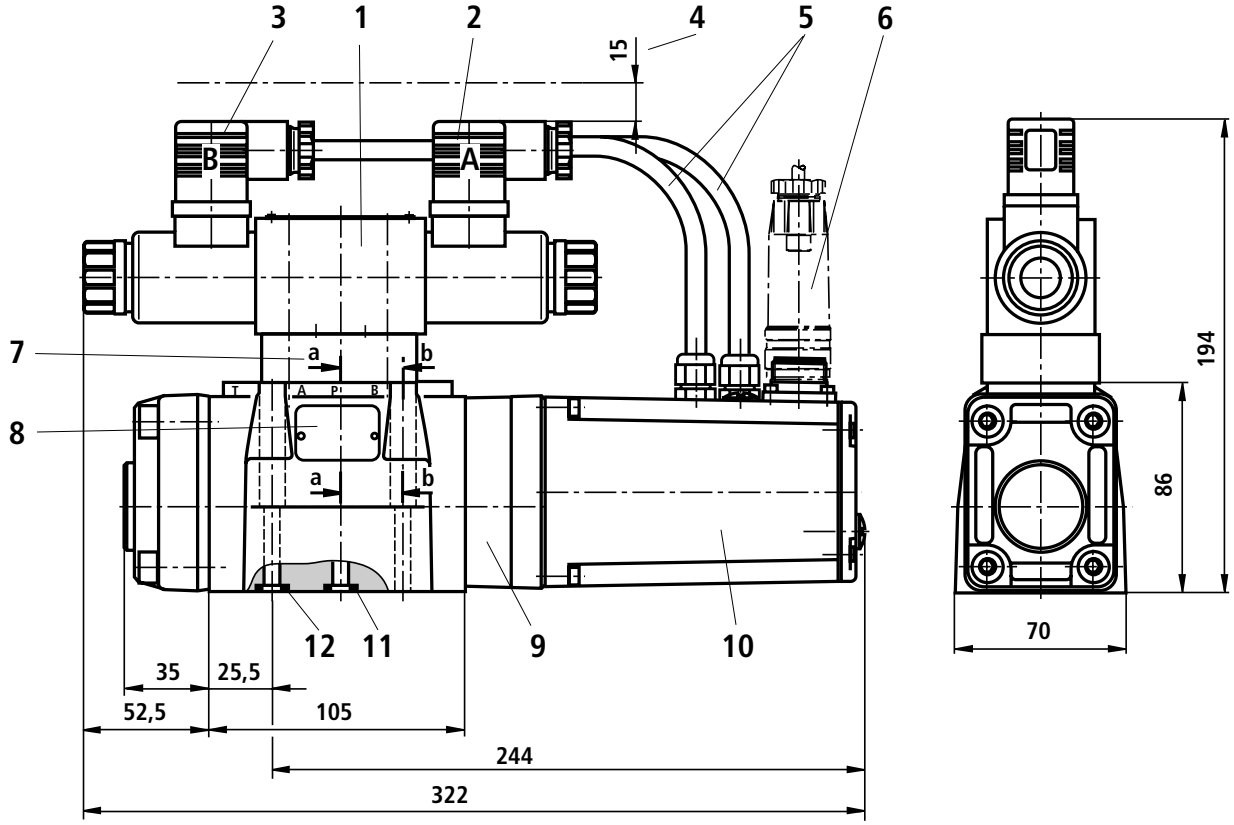

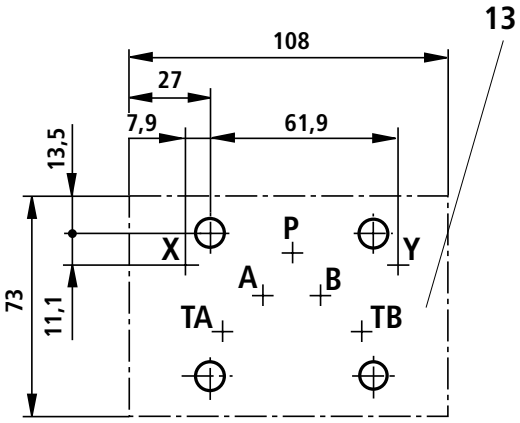

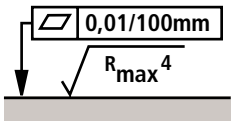

Required surface finish of mating piece

Subplates to catalogue sheet RE 45 054 and valve fixing screws must be ordered separately.

For sectional drawing see page 20

Subplates: G 534/01 (G 3/4)
G 535/01 (G 3/4) with ports X and Y
G 536/01 (G 1) with ports X and Y

Valve fixing screws:
4 off M6 x 45 DIN 912-10.9; M_A =14 Nm

1 Pilot control valve
2 Plug-in connector "A", colour grey
3 Plug-in connector "B", colour black
4 Space required to remove the plug-in connector
5 Cabling
6 Plug-in connector (plastic version) to E DIN 43 563-BF6-3/Pg11, separate order, see page 7
7 Pressure reducing valve
8 Name plate
9 Main valve
10 Integrated control electronics
11 Same seal rings for ports A, B, P, T
12 Same seal rings for ports X and Y
13 Machined valve mounting surface, position of the ports to DIN 24 340 form A, ISO 4401 and CETOP-RP121H

Unit dimensions: NS 16 (dimensions in mm)

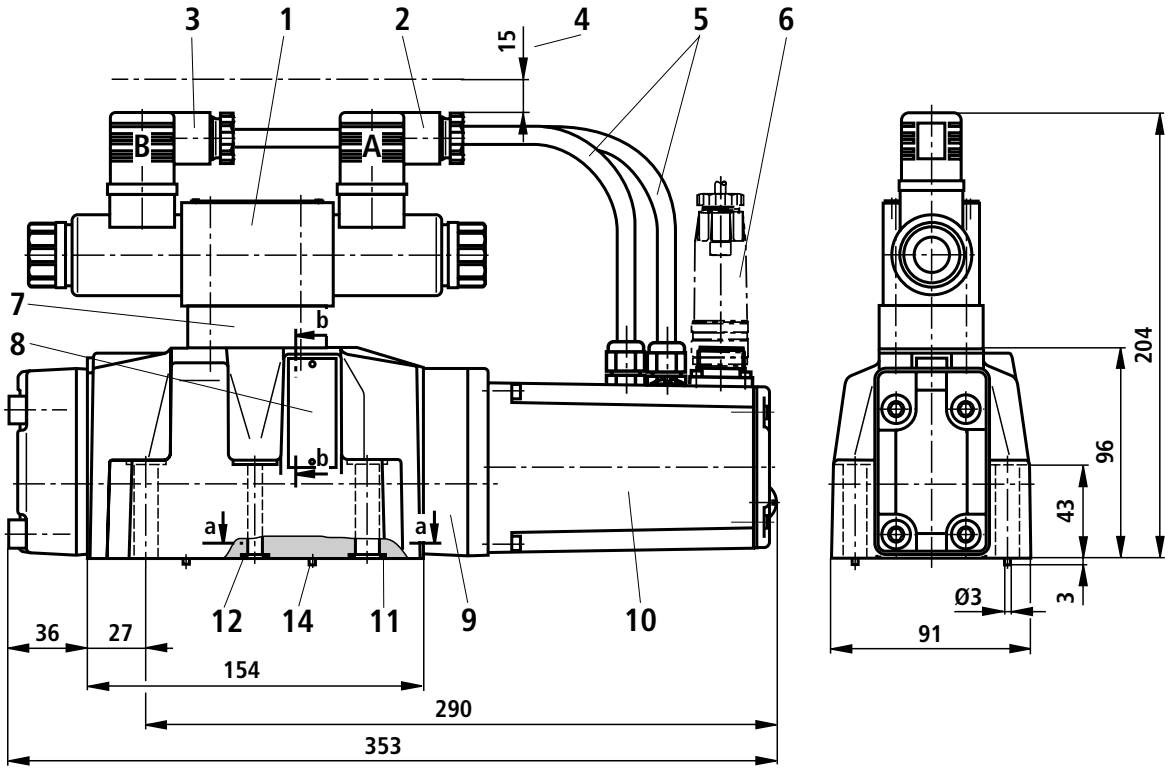

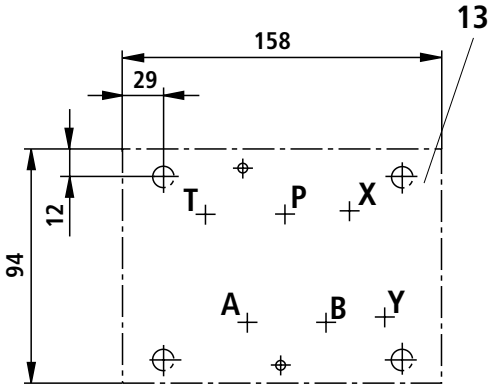

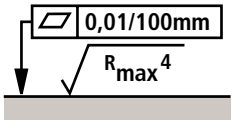

Required surface finish of mating piece

Subplates to catalogue sheet RE 45 056 and valve fixing screws must be ordered separately.

For sectional drawing see page 20

Subplates: G 172/01 (G 3/4) G 174/01 (G 1)
G 172/02 (M27 x 2) G 174/02 (M33 x 2)

Valve fixing screws:
2 off M6 x 60 DIN 912-10.9; M_A = 14 Nm
4 off M10 x 60 DIN 912-10.9; M_A = 68 Nm

1 Pilot control valve
2 Plug-in connector "A", colour grey
3 Plug-in connector "B", colour black
4 Space required to remove the plug-in connector
5 Cabling
6 Plug-in connector (plastic version) to E DIN 43 563-BF6-3/Pg11, separate order, see page 7
7 Pressure reducing valve
8 Name plate
9 Main valve
10 Integrated control electronics
11 Same seal rings for ports A, B, P and T
12 Same seal rings for ports X and Y
13 Machined valve mounting surface, position of the port to DIN 24 340 form A, ISO 4401 and CETOP-RP121H
14 Locating pin

Unit dimensions: NS 25 (dimensions in mm)

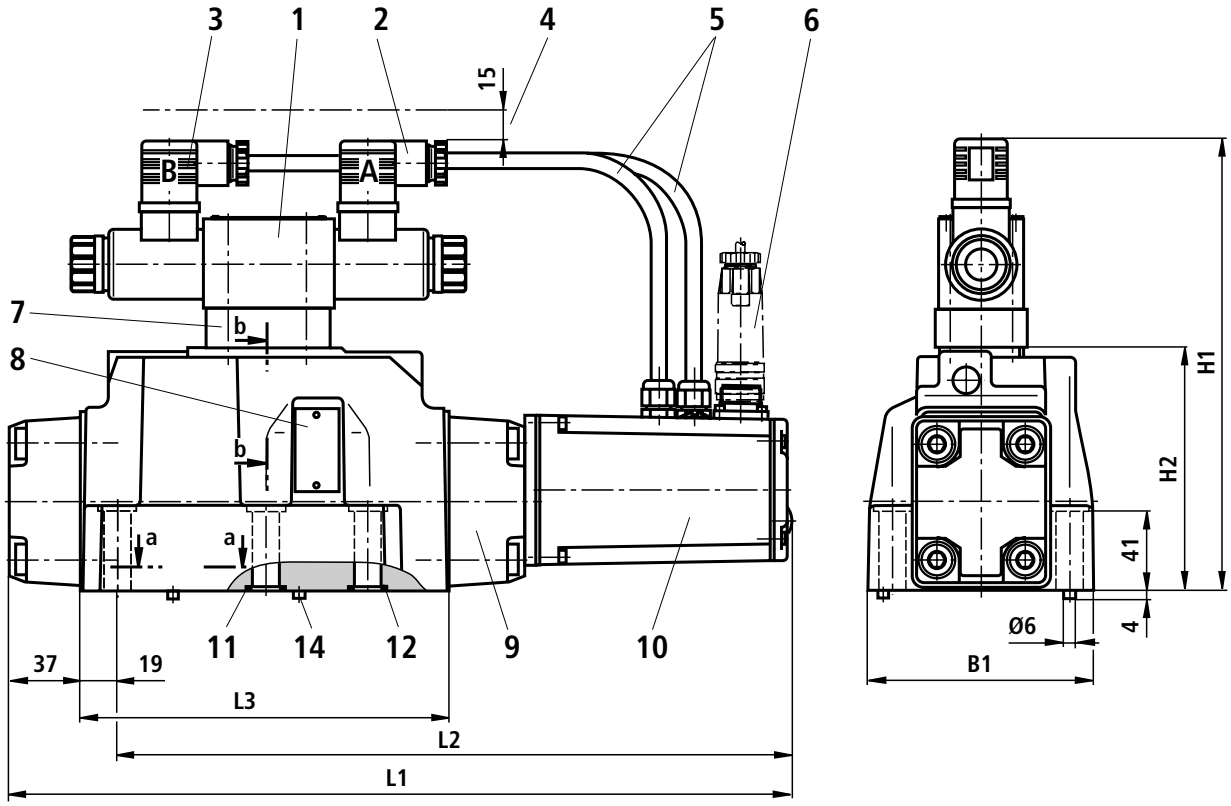

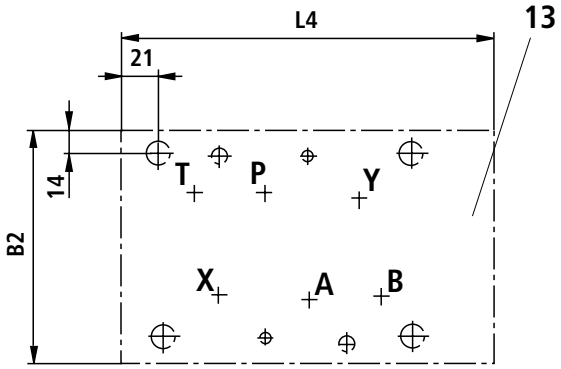

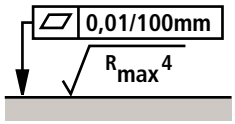

Required surface finish of mating piece

Subplates to catalogue sheet RE 45 058 and valve fixing screws must be ordered separately.

For sectional drawing see page 20

Subplates: G 151/01 (G 1)
G 154/01 (G 1 1/4)
G 156/01 (G 1 1/2)

Valve fixing screws:
6 off M12 x 60 DIN 912-10.9; M_A = 130 Nm

1 Pilot control valve
2 Plug-in connector "A", colour grey
3 Plug-in connector "B", colour black
4 Space required to remove plug-in connector
5 Cabling
6 Plug-in connector (plastic version) to E DIN 43 562-BF6-3/Pg 11, separate order, see page 7
7 Pressure reducing valve
8 Name plate
9 Main valve
10 Integrated control electronics
11 Same seal rings for ports A, B, P and T
12 Same seal rings for ports X, Y
13 Machined valve mounting surface, position of the ports to DIN 24 340 form A, ISO 4401 and CETOP-RP121H
14 Locating pin

Unit dimensions: NS 32 (dimensions in mm)

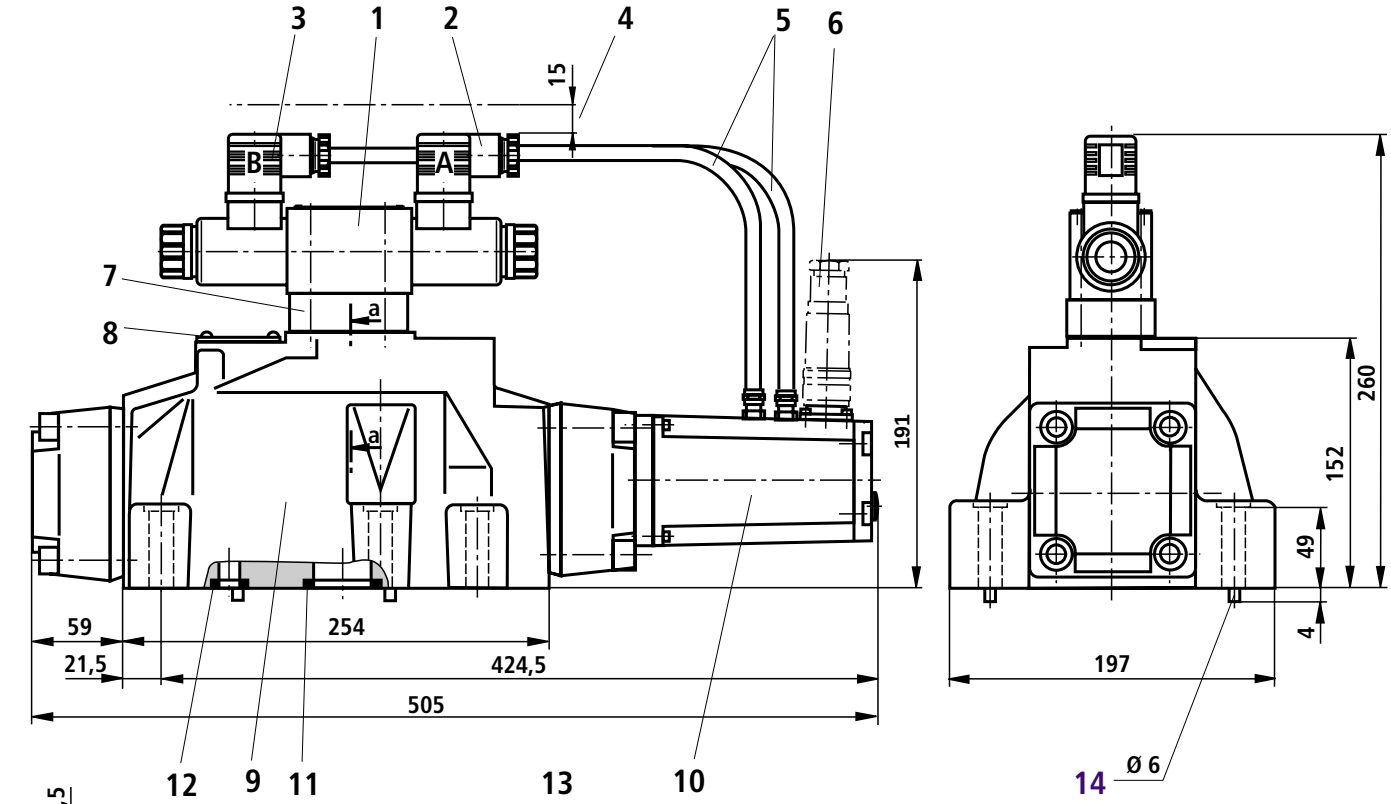

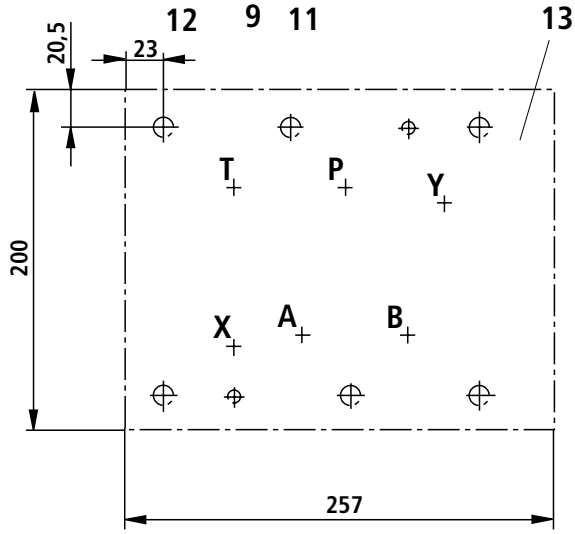

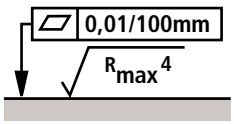

Required surface finish of mating piece

Subplates to catalogue sheet RE 45 060 and valve fixing screws must be ordered separately.

For sectional drawing see page 20

Subplates: G 157/01 (G 1 1/2)
G 157/02 (M48 x 2)
G 158/10 (flange)

Valve fixing screws:
6 off M20 x 80 DIN 912-10.9; M_A =430 Nm

1 Pilot control valve
2 Plug-in connector "A", colour grey
3 Plug-in connector "B", colour black
4 Space required to remove the plug-in connector
5 Cabling
6 Plug-in connector (plastic version) to E DIN 43 562-BF6-3/Pg 11, separate order, see page 7
7 Pressure reducing valve
8 Name plate
9 Main valve
10 Integrated control electronics
11 Same seal rings for ports A, B, P and T
12 Same seal rings for ports X, Y
13 Machined valve mounting surface, position of the ports to DIN 24 340 form A, ISO 4401 and CETOP-RP121H
14 Locating pin

Unit dimensions: NS 35 (dimensions in mm)

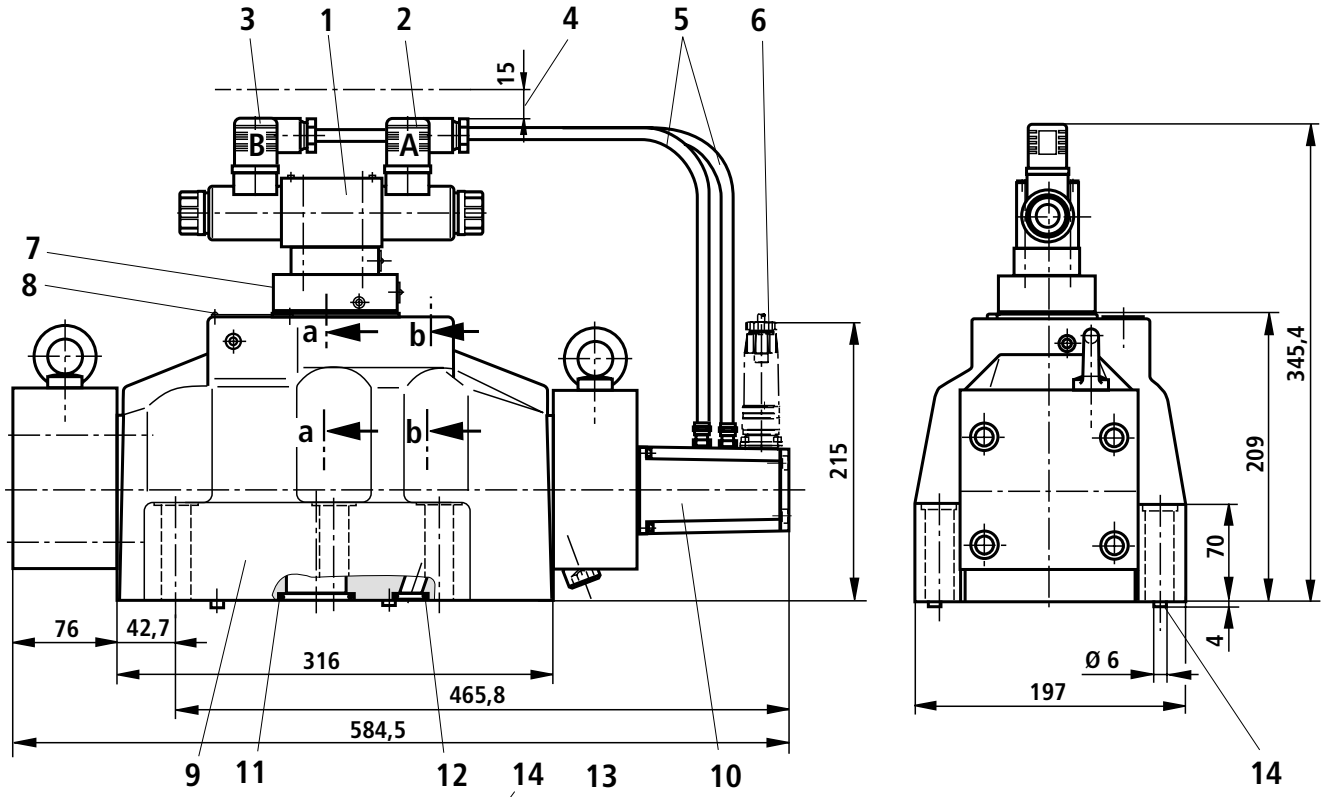

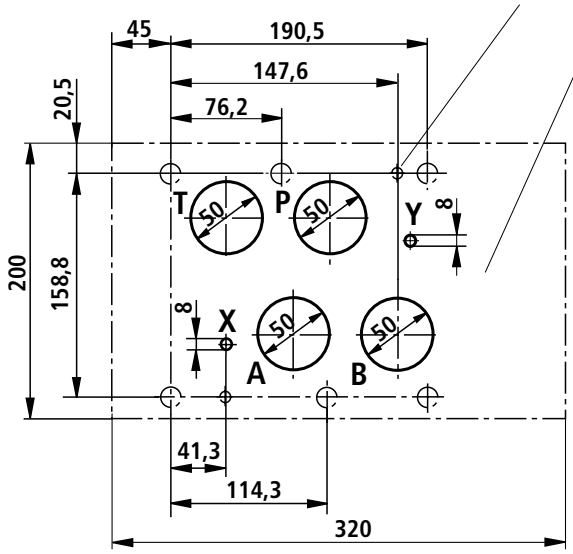

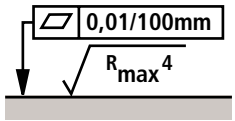

Required surface finish of mating piece

Valve fixing screws
6 off M20 x 100 DIN 912-10.9; M_A = 430 Nm
must be ordered separately.

For sectional drawing see page 20

1 Pilot control valve
2 Plug-in connector "A", colour grey
3 Plug-in connector "B", colour black
4 Space required to remove the plug-in connector
5 Cabling
6 Plug-in connector (plastic version) to E DIN 43 562-BF6-3/Pg 11, separate order, see page 7
7 Pressure reducing valve
8 Name plate
9 Main valve
10 Integrated control electronics
11 Same seal rings for ports A, B, P and T
12 Same seal rings for ports X, Y
13 Machined valve mounting surface with position of the ports
14 Locating pin

Pilot oil supply

Type 4WRKE…-3X/… **Pilot oil supply external**
Pilot oil drain external

In this type the pilot oil supply is from a separate pilot pressure circuit (external).
The pilot oil drain is not into the T port of the main valve but separately into tank via port Y (external).

Type 4WRKE…-3X/…E… **Pilot oil supply internal**
Pilot oil drain external

In this type the pilot oil supply is from the P port of the the main valve (internal).
The pilot oil drain is not into the T port of the main valve but separately into tank via port Y (external).
Port X must be plugged in the subplate.

Type 4WRKE…-3X/…ET… **Pilot oil supply internal**
Pilot oil drain internal

In this type the pilot oil supply is from the P port of the main valve (internal).
The pilot oil drain is directly into the T port of the main valve (internal).
Port Y must be plugged in the subplate.

Type 4WRKE…-3X/…T… **Pilot oil supply external**
Pilot oil drain internal

In this type the pilot oil supply is from a separate pilot pressure circuit (external).
The pilot oil drain is directly into the T port of the main valve (internal).
Port Y must be plugged in the subplate.

Pos. **1** and **2**: Plug M6 DIN 906-8.8 3A/F

NS 10 Sectional diagram, see page 15

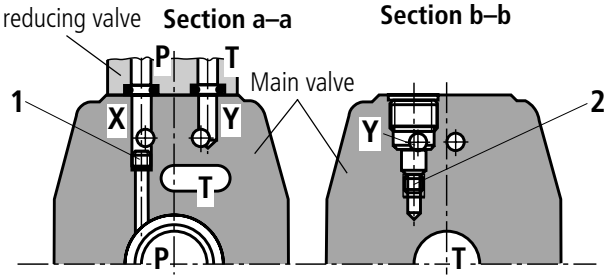

Pilot oil supply	external:	**1**	closed
(section a–a)	internal:	**1**	open
Pilot oil drain	external:	**2**	closed
(section b–b)	internal:	**2**	open

NS 16 Sectional diagram, see page 16

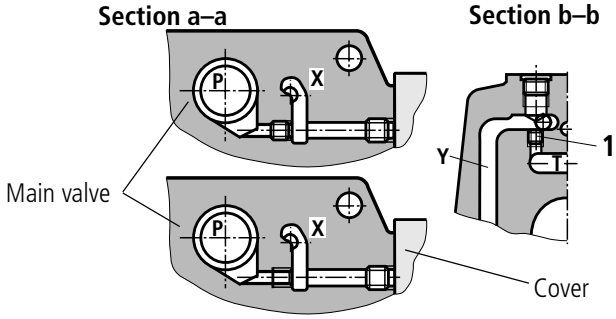

Pilot oil supply	external:	**P**	closed
(section a–a)	internal:	**P**	open
Pilot oil drain	external:	**1**	closed
(section b–b)	internal:	**1**	open

NS 25 Sectional diagram, see page 17

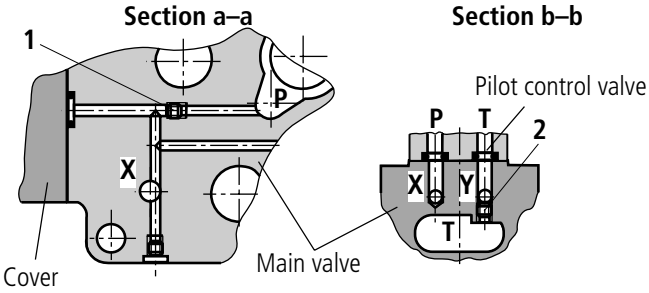

Pilot oil supply	external:	**1**	closed
(section a–a)	internal:	**1**	open
Pilot oil drain	external:	**2**	closed
(section b–b)	internal:	**2**	open

NS 32 Sectional diagram, see page 18

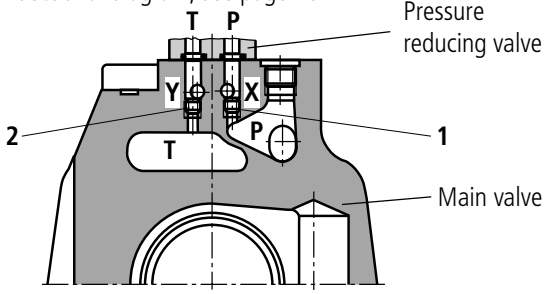

Pilot oil supply	external:	**1**	closed
	internal:	**1**	open
Pilot oil drain	external:	**2**	closed
	internal:	**2**	open

NS 35 Sectional diagram, see page 19

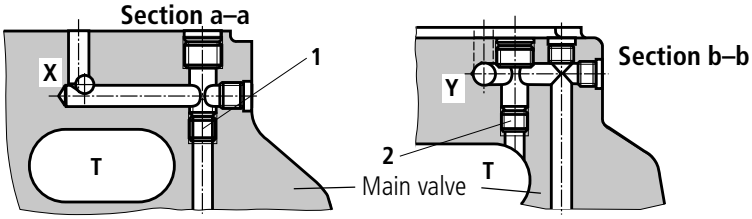

Pilot oil supply	external:	**1**	closed
(section a–a)	internal:	**1**	open
Pilot oil drain	external:	**2**	closed
(section b–b)	internal:	**2**	open

Bosch Rexroth AG
Industrial Hydraulics

D-97813 Lohr am Main
Zum Eisengießer 1 • D-97816 Lohr am Main
Telefon 0 93 52 / 18-0
Telefax 0 93 52 / 18-23 58 • Telex 6 89 418-0
eMail documentation@boschrexroth.de
Internet www.boschrexroth.de

Bosch Rexroth Limited

Cromwell Road, St Neots,
Cambs, PE19 2ES
Tel: 0 14 80/22 32 56
Fax: 0 14 80/21 90 52
E-mail: info@boschrexroth.co.uk